THERMOMUR®

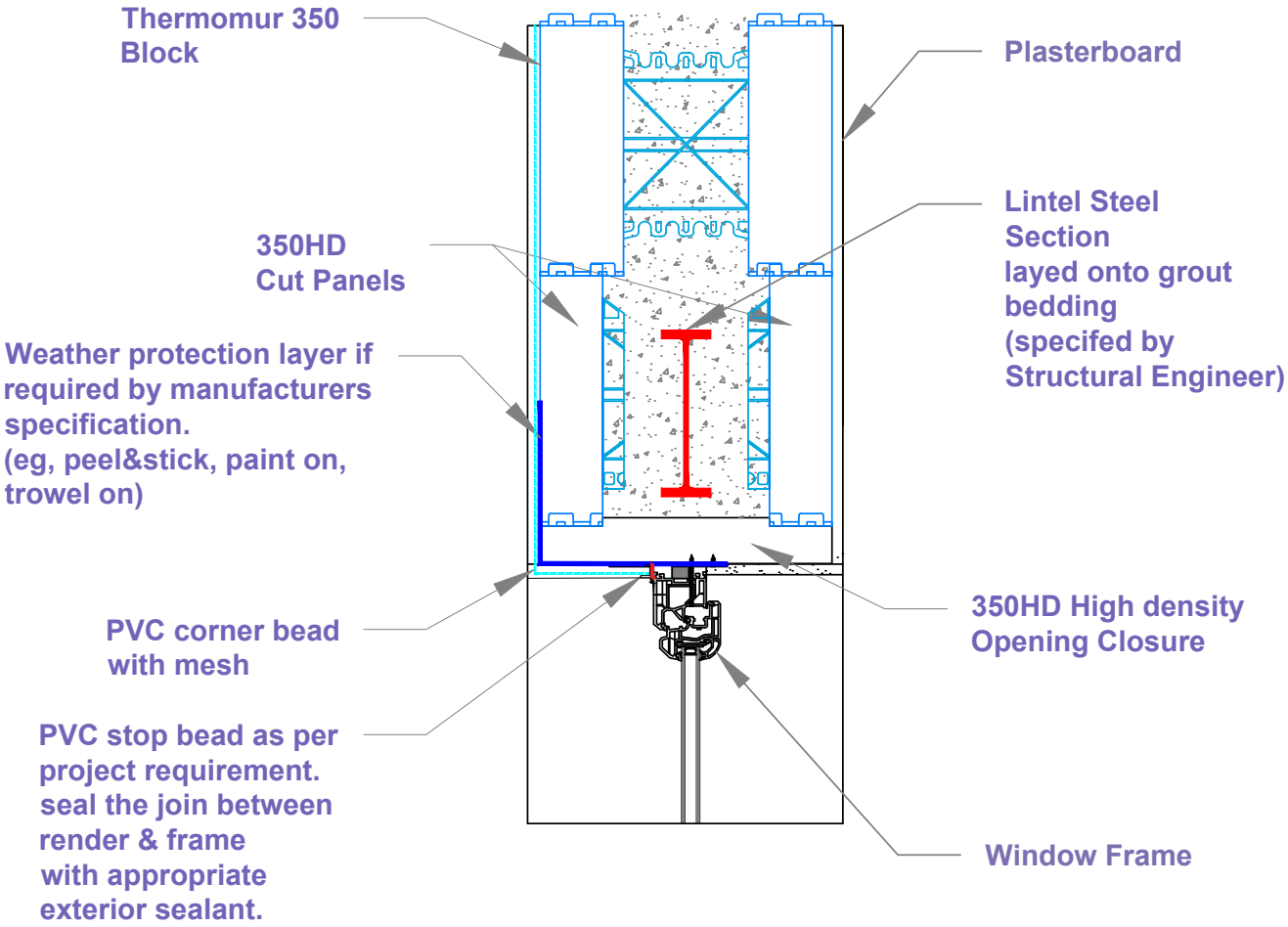

Scale: 1:8

Thermomur 350

Junction Details

JK-11s Lintel & Jamb-350HD Opening Closur- Steel Section Drawn By: MAJ Date: **Nov-22**

For more information: Visit www.bewi.com/uk or call 01204 221089

© BEWI-04-2024 001

BEWI